TAB. NO.	DESCRIPTION

REVISIONS

REV	ECO NO.	DESCRIPTION	DRN.	DATE	CHKD.	APPD.
01	---------	PRE-RELEASE	JSC	2/17/99	JPB	PCF
A	00-1571	RELEASE TO PRODUCTION	JSC	2/10/00	JPB	BN

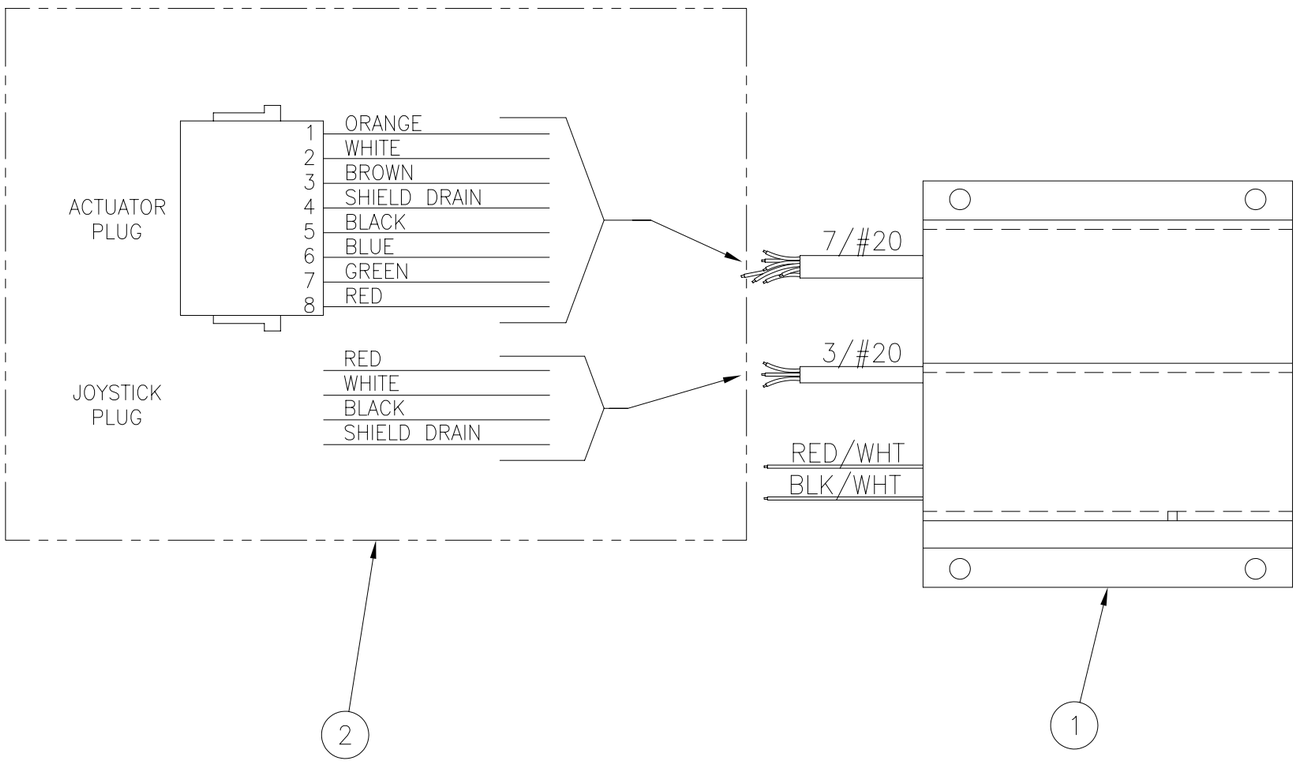

2. PLACE SHRINK TUBE OVER SHIELD FROM PIN TO OUTER JACKET.

1. STRIP OUTER JACKET BACK 2 INCHES ON EACH CABLE.

NOTES:

ADDCO, CONFIDENTIAL INFORMATION

THIS DRAWING CONTAINS CONFIDENTIAL AND PROPRIETARY INFORMATION OF ADDCO NOT TO BE USED BY OR DISCLOSED TO ANY OTHER INDIVIDUAL OR LEGAL ENTITY WITHOUT AUTHORIZATION OF A REPRESENTATIVE OF ADDCO

ASSEMBLIES, WELDMENTS, AND RAW MATERIAL TO BE FREE OF RUST

DEBURR & REMOVE ALL SHARP EDGES AND CORNERS

STANDARD TOLERANCES & NOTES UNLESS OTHERWISE SPECIFIED

DIMENSIONS ARE IN INCHES

STANDARD TOLERANCES

.X ± .030 .XXXX ± N/A
.XX ± .015 ANGLES ± 1°
.XXX ± .005 FRACTIONAL ± 1/32

DRN.	J.CALTON	DATE 2/17/99
CHKD.	J BUETTNER	2/17/99
APPD.	P.FREEBERG	2/17/99
APPROX. WEIGHT		
MATERIAL	N/A	
FINISH	N/A	

ADDCO
ST. PAUL, MN, 55117

TITLE
ASSEMBLY, 771-0107 WITH DEUTSCH

GROUP IPG | DO NOT SCALE DRAWING

SIZE B | NUMBER 001-4622 | REV A

SCALE 1/1 | REF | SHT 1 OF 1